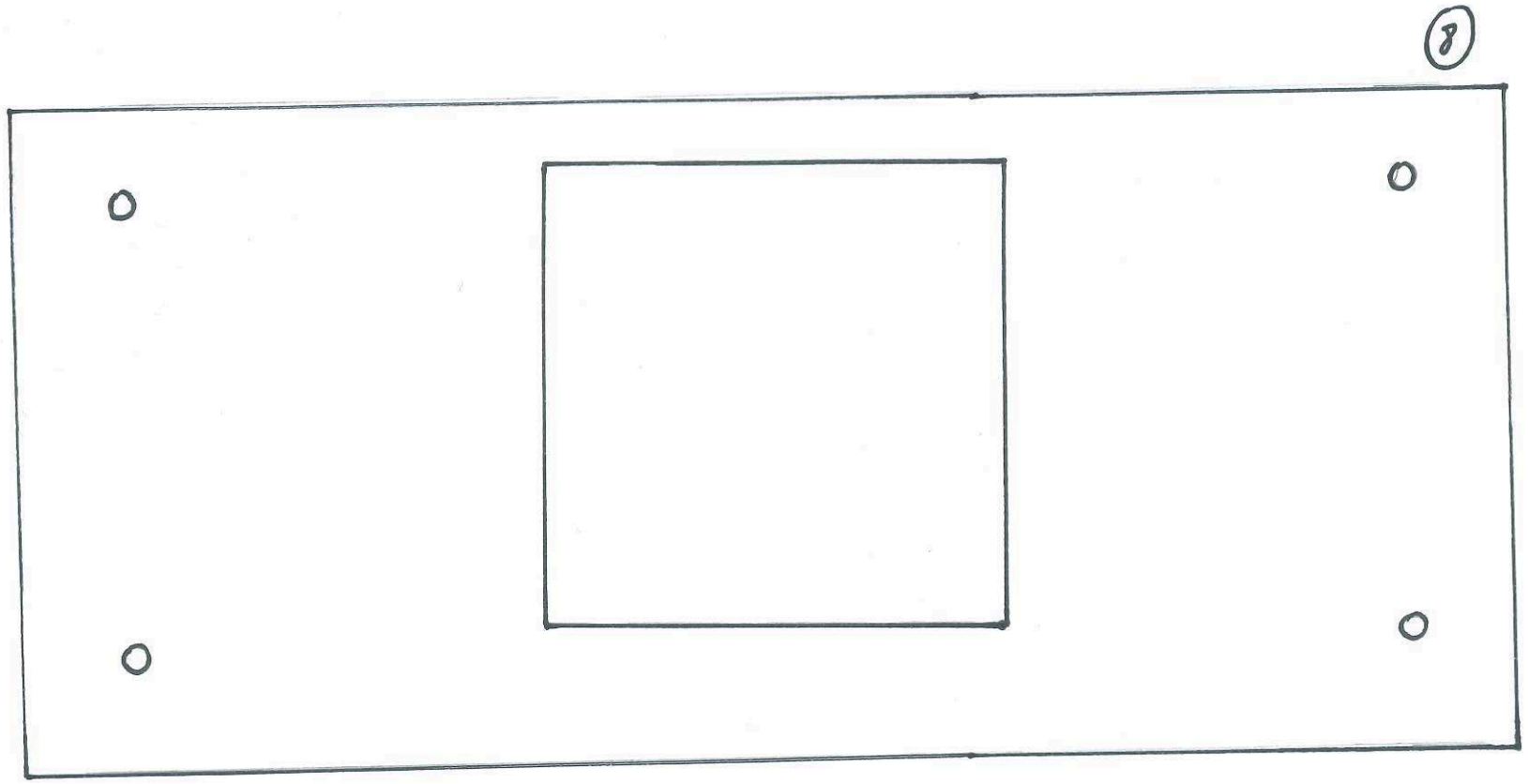

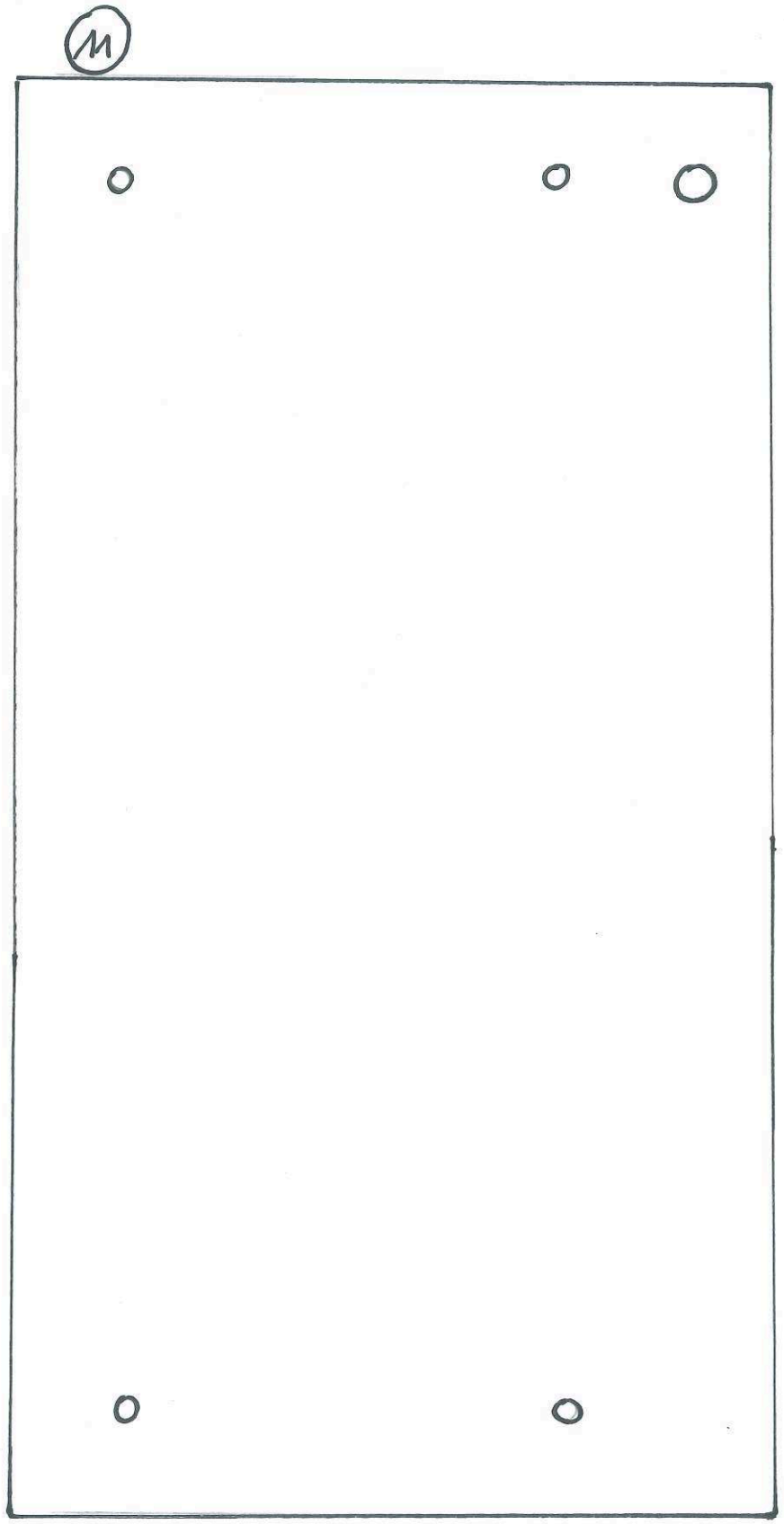

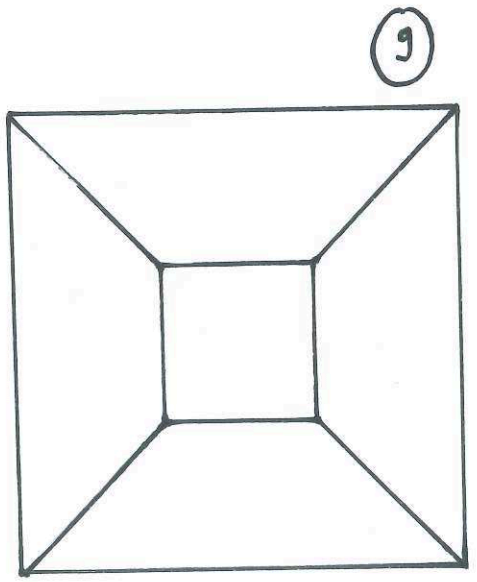

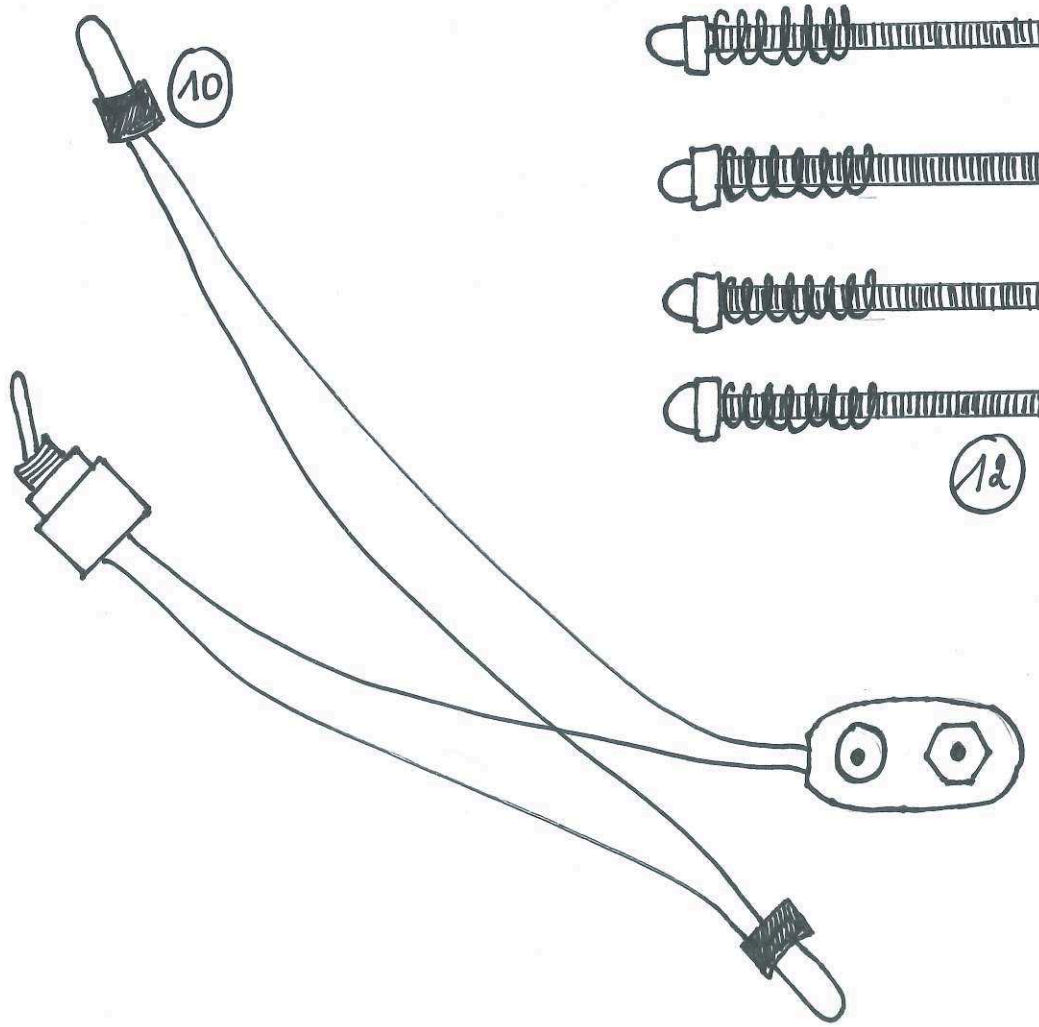

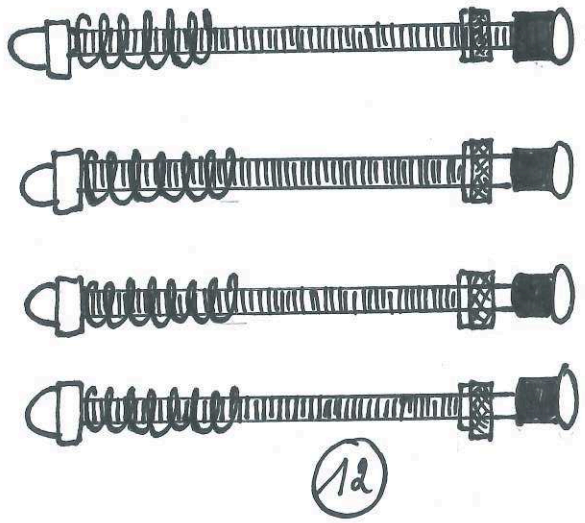

Activities
@VTIWaregem
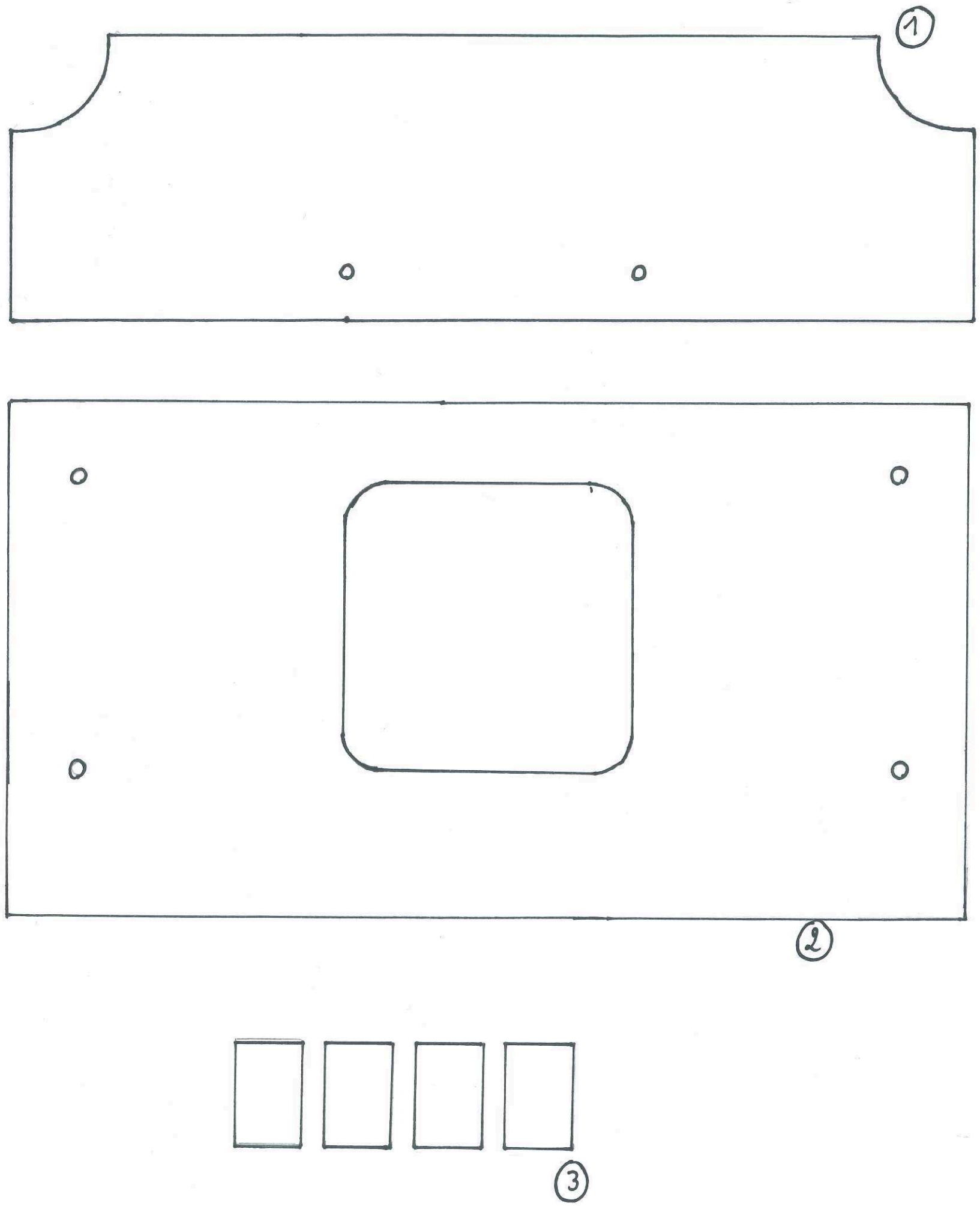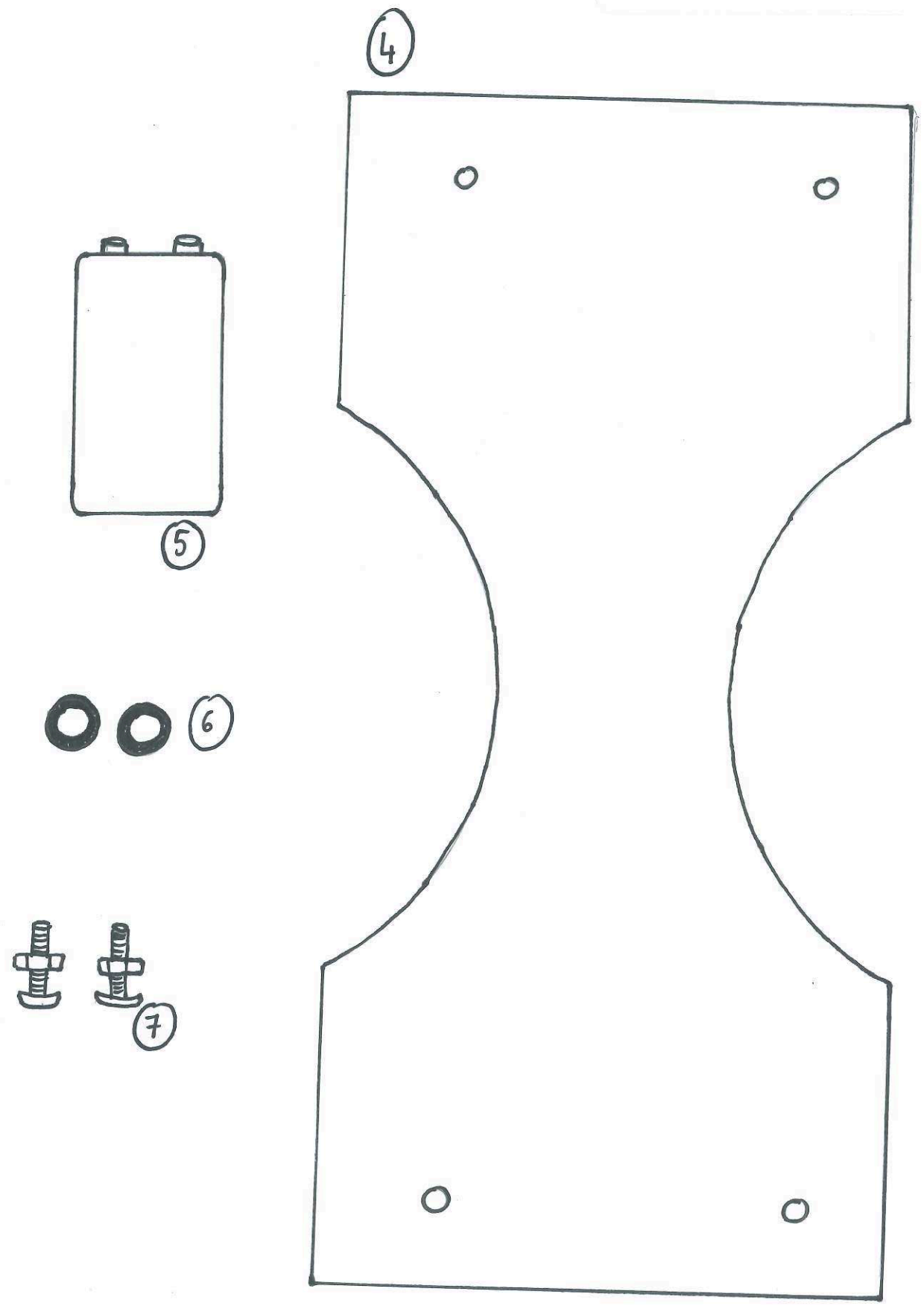
Activities
@VTIWaregem